Outline Drawing

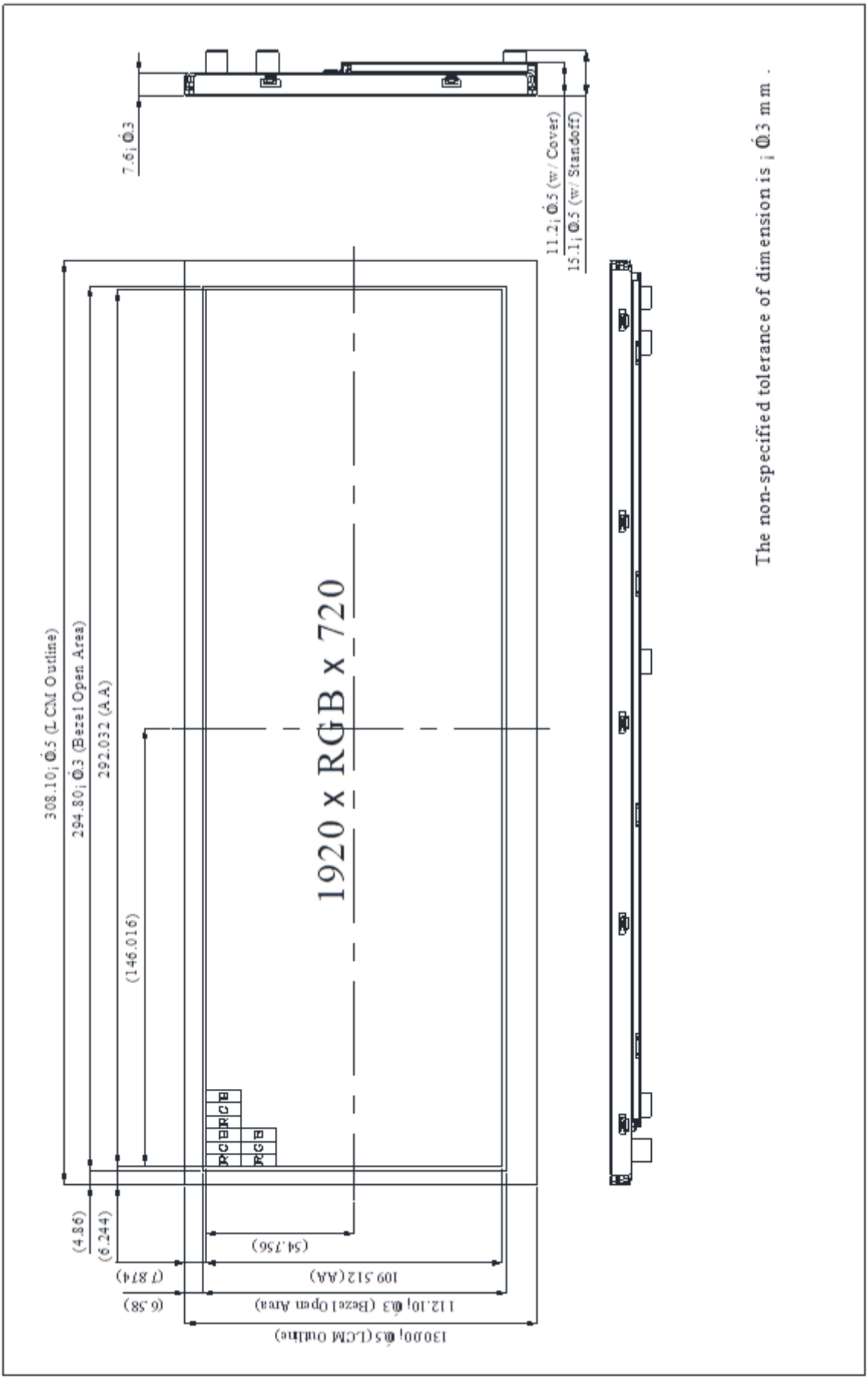

Outline Drawing

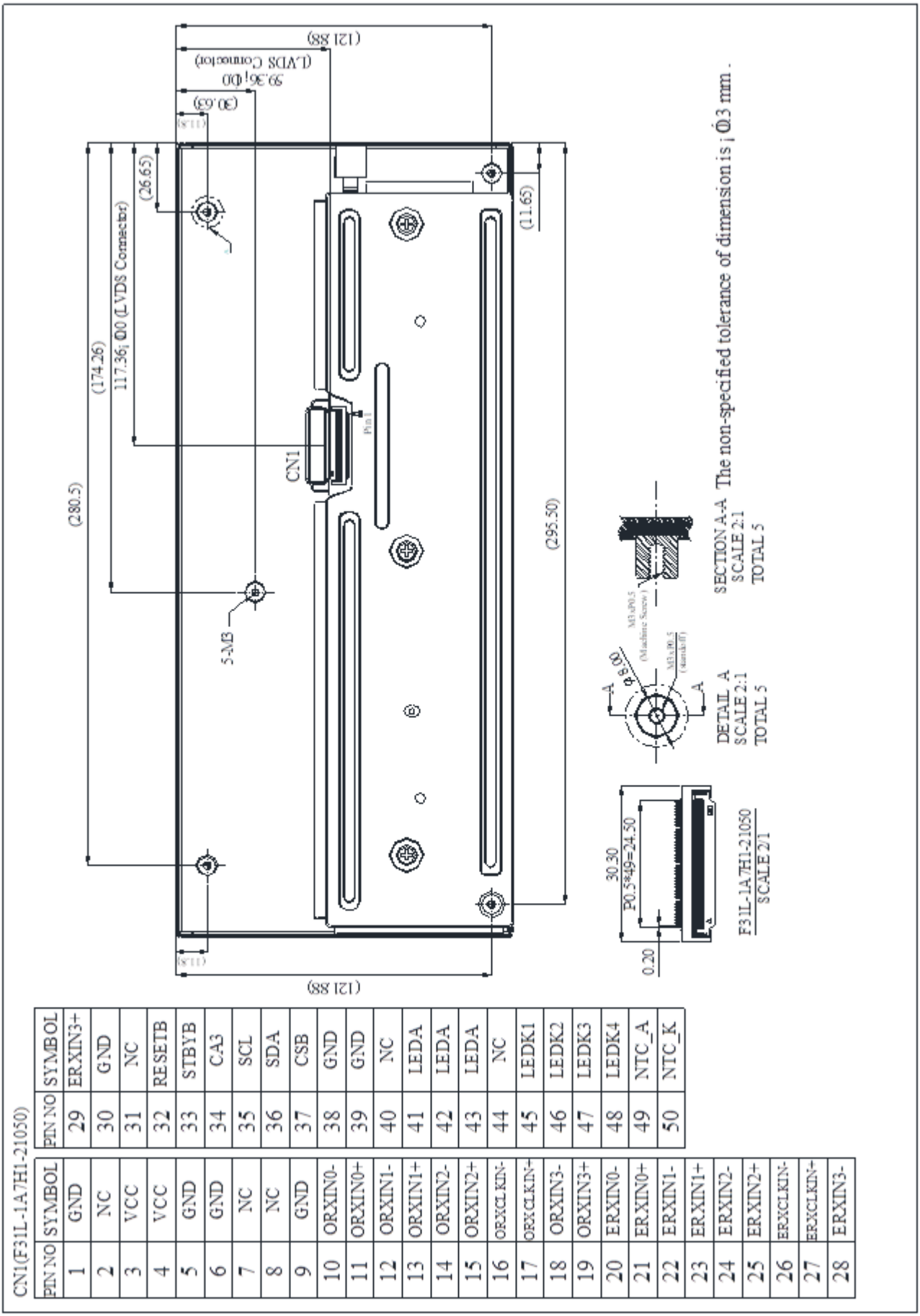

CN1(F31L-1A7H1-21050)

PIN NO	SYMBOL	PIN NO	SYMBOL
1	GND	29	ERXIN3+
2	NC	30	GND
3	VCC	31	NC
4	VCC	32	RESETB
5	GND	33	STBYB
6	GND	34	CA3
7	NC	35	SCL
8	NC	36	SDA
9	GND	37	CSB
10	ORXIN0-	38	GND
11	ORXIN0+	39	GND
12	ORXIN1-	40	NC
13	ORXIN1+	41	LEDA
14	ORXIN2-	42	LEDA
15	ORXIN2+	43	LEDA
16	ORXCLKIN-	44	NC
17	ORXCLKIN+	45	LEDK1
18	ORXIN3-	46	LEDK2
19	ORXIN3+	47	LEDK3
20	ERXIN0-	48	LEDK4
21	ERXIN0+	49	NTC_A
22	ERXIN1-	50	NTC_K
23	ERXIN1+		
24	ERXIN2-		
25	ERXIN2+		
26	ERXCLKIN-		
27	ERXCLKIN+		
28	ERXIN3-		